ENCLOSURES
& ENGINEERING

55 YEARS

Serving our industry proudly for 55 years!

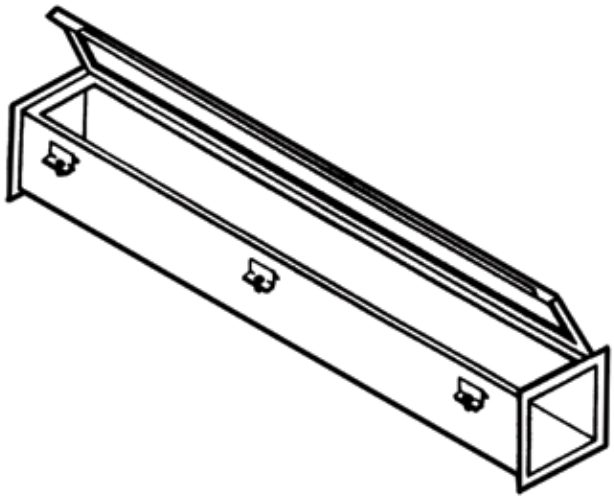

## Standard Sizes

| Height | Depth | Length |
|---|---|---|
| 8 | 8 | 12 |
| 8 | 8 | 24 |
| 8 | 8 | 36 |
| 8 | 8 | 48 |
| 8 | 8 | 60 |
| 8 | 8 | 72 |
| 8 | 8 | 120 |

| Height | Depth | Length |
|---|---|---|
| 10 | 10 | 12 |
| 10 | 10 | 24 |
| 10 | 10 | 36 |
| 10 | 10 | 48 |
| 10 | 10 | 60 |
| 10 | 10 | 72 |
| 10 | 10 | 120 |

| |
|---|
| 8x8 90˚ Elbow |
| 8x8 45˚ Elbow |
| 8x8 End Plate |
| 8x8 Tee |
| 8x8 6” Long Nipple |
| 8x8 Box Connector |
| 8x8 Reducer 4” to 2 ½“ |
| 8x8 Gasket and Screws |
| 8x8 Drop Hanger |
| 8x8 Bracket Hanger |

| |
|---|
| 10x10 90˚ Elbow |
| 10x10 45˚ Elbow |
| 10x10 End Plate |
| 10x10 Tee |
| 10x10 6” Long Nipple |
| 10x10 Box Connector |
| 10x10 Reducer 4” to 2 ½“ |
| 10x10 Gasket and Screws |
| 10x10 Drop Hanger |
| 10x10 Bracket Hanger |

## NEMA 4 Flanged Hinged Wireway

**Application**
EPI NEMA 4 JIC Flanged, Hinge Cover Wireway is designed to protect electrical wiring in areas which may be regularly hosed down or are very wet. Suitable for use outdoors, or in dairies, breweries and similar installations. A complete selection of sections and fittings is available in 4X4, 6x6, 8x8, 10x10, and 12x12 sizes.

**Construction**
Made from 16 or 14-gauge steel. The end flanges are made from 12-gauge steel. All seams are continuously welded and there are no holes or knockouts. All sections and fittings have smooth rounded edges to prevent damage to insulation. The covers have gasket with oil resistant adhesive . Stainless steel butt hinges and external stainless steel screw clamps assure complete seal between covers and bodies. A solid oil resistant gasket is positioned between flanges when sections and fittings are bolted together.

**Finish**
The standard finish is Sherwin Williams ANSI-70, light-dove gray inside and out. Clamps and screws are stainless steel. Additional finishes are available.

**Industry Standard**
Meets National Electrical Manufacturers Association (NEMA) standard for Type 4 (Water Tight and Dust Tight), Type 12 (Industrial Use) and Type 13 (Oil Tight and Dust Tight) enclosures. Also conforms to the Joint Industrial Council (JIC) EGP-1-1967.


©March 2023

ENCLOSURES
& ENGINEERING

55 YEARS

Serving our industry proudly for 55 years!

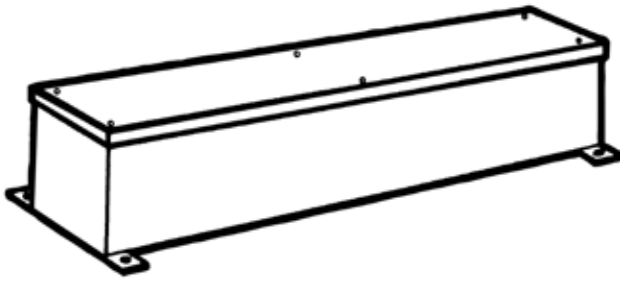

## Standard Sizes

| Height | Depth | Length |
|---|---|---|
| 4 | 4 | 12 |
| 4 | 4 | 24 |
| 4 | 4 | 36 |
| 4 | 4 | 48 |
| 4 | 4 | 60 |
| 4 | 4 | 72 |
| | | |
| 6 | 6 | 12 |
| 6 | 6 | 24 |
| 6 | 6 | 36 |
| 6 | 6 | 48 |
| 6 | 6 | 60 |
| 6 | 6 | 72 |
| | | |
| 8 | 8 | 12 |
| 8 | 8 | 24 |
| 8 | 8 | 36 |
| 8 | 8 | 48 |
| 8 | 8 | 60 |
| 8 | 8 | 72 |

| Height | Depth | Length |
|---|---|---|
| 10 | 10 | 24 |
| 10 | 10 | 36 |
| 10 | 10 | 48 |
| 10 | 10 | 60 |
| 10 | 10 | 72 |
| | | |
| 12 | 12 | 24 |
| 12 | 12 | 36 |
| 12 | 12 | 48 |
| 12 | 12 | 60 |
| 12 | 12 | 72 |

## NEMA 4 Aluminum Screw Cover Wireway

**Application**
EPI NEMA 4 JIC .100 or .125 Aluminum (Type 5052H) Screw Cover Wireway is designed to protect wiring in areas which may be regularly hosed down or are very wet. Suitable for use outdoors, or in dairies, breweries, sewage plants, petrochemical plants and similar installations.

**Construction**
Made from .100 or .125 Aluminum (Type 5052H). All seams are continuously welded and there are no holes or knockouts. The covers have gasket with oil resistant adhesive (Covers not to exceed 72"). The cover is fastened with stainless steel self-tapping hex-head screws and provides a complete seal between covers and bodies. Exterior mounting feet can be provided for mounting.

**Finish**
These enclosures are unpainted. All covers and bodies are .100 or .125 Aluminum (Type 5052H) ground smooth and free of sharp edges.

**Industry Standard**
Meets National Electrical Manufacturers Association (NEMA) standard for Type 4 (Water Tight and Dust Tight), Type 12 (Industrial Use), and Type 13 (Oil Tight and Dust Tight) enclosures. Also conforms to the Joint Industrial Council (JIC) EGP-1-1967.


©March 2023