ELECTRICAL ENCLOSURES & ENGINEERING

Serving our industry proudly for over 50 years!

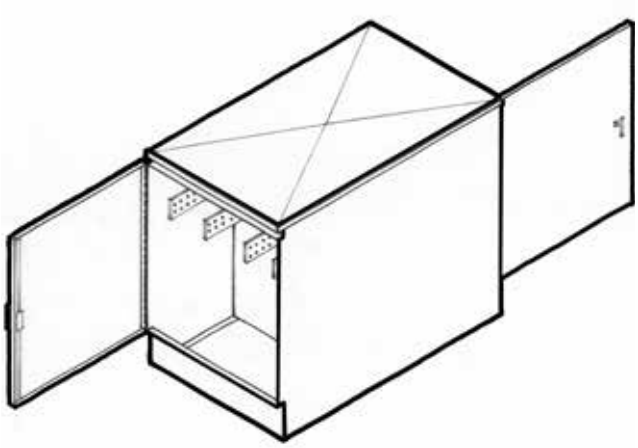

Standard Sizes

WxHxD	Amps	Item No.
36x51x60	2,500	N3RCPE2500ATB365160
36x51x60	3,000	N3RCPE3000ATB365160
48x60x60	4,000	N3RCPE4000ATB486060
48x72x60	5,000	N3RCPE5000ATB487260
60x72x60	6,000	N3RCPE6000ATB607260

NEMA 3R CPE Bus Secondary Tapbox

Construction
EPI Center Point Energy Bus Secondary Tap Box is constructed of 12 Gauge Steel, primed with gray-oxide and enamel painted inside and out with Sherwin Williams ANSI-70, Light-Dove Gray. Available in Aluminum and Stainless Steel.

Tap Box will be dual access. The doors have continuous stainless steel hinge-cover doors with a stainless steel hinge. The doors are secured by a three-point locking mechanism and a T-Handle with provisions for padlocking. An open bottom with a mounting flange is installed. Tap Box is crossed crimp on top of box.

Bracing
Steel Bracing @ 100,000 AIC, is installed to receive Phase and Neutral Bars on 3" minimum 600V insulators.

Buss Bars
C110 Silver Plated Copper is used on all Phase bars, Neutral and Ground bars where applicable. Ampacity is determined by one square inch cross section of copper equaling 1,000 Amps per N.E.C. article 374, 374-6. Bars are continuously punched with 9/16 "holes at 1 ¾" each way.

Barriers
The Tap box has two separate compartments, one side for CNP connections and the other side for customer's connection. The insulating barriers are to be ½" phenolic resin impregnated barrier boards (NEMA Grade N-1 or GPO-3).

Industry Standard
Meets NEMA standard for Type 3R (rainproof and sleet-ice resistant) enclosures.

©March 2021